8/28/2015

Some Dam – Hydro News™

And Other Stuff

i

Quote of Note: *"If things seem under control, you are just not going fast enough."*
--Mario Andretti,

Some Dam - Hydro News → Newsletter Archive for Back Issues and Search http://npdp.stanford.edu/
Click on Link (Some Dam - Hydro News) Bottom Right - Under Perspectives

"Good wine is a necessity of life." - -Thomas Jefferson
Ron's wine pick of the week: **2012 Ponzi Pinot Noir "Willamette Valley"**
"No nation was ever drunk when wine was cheap." - - Thomas Jefferson

Dams:

(Another dam removal story.)

Excavators demolish dam on Evans Creek to improve salmon migration

By Jeff Duewel / Grants Pass Daily Courier, Aug 15, 2015, bendbulletin.com

GRANTS PASS, OR — Three large excavators pulverized 80-year-old concrete at Fielder Dam, a 19-foot-tall relic on Evans Creek that hasn't diverted any irrigation water for three decades.
When the dam's gone, about 70 miles of spawning tributaries of the Rogue River will be more accessible for salmon and steelhead, said project leaders. "This is great news for salmon and steelhead, and the many people who love the Rogue River," said Bob Hunter, WaterWatch board member who was instrumental in removing Savage Rapids Dam, ending in 2009.
Staton Construction of Salem has demolished numerous dams around the Northwest, including Elwha and Condit in Washington, to help fish passage, so Wednesday's work was efficient. About 550 cubic yards of concrete — about 55 truckloads — from the dam will be taken to a site in Central Point. "They move pretty fast," said Brian Barr, project collaborator representing the GEOS Institute, an Ashland-based nonprofit focusing on science and climate change.
The demolition is part of a $700,000 project to remove Fielder and Wimer, an 11-foot-tall dam about five miles upstream that was knocked out two weeks ago. Both dams had fish ladders that were substandard, especially for fall chinook salmon when the creek is low in the fall. Passage

was also difficult in high flows, Barr said. "We certainly expect better survival and reproduction upstream after this dam and Wimer are gone," Barr said.

On the Oregon Department of Fish and Wildlife's statewide list of fish passage problems, Fielder was ranked fourth and Wimer ninth-worst. "When you're talking No. 4 and No. 9 in the state, that's a pretty good indication of the severity," said Jay Doino, biologist for the ODFW in Central Point. "In a normal water year, most fall chinook cannot pass Fielder. If you look at spawning distribution, above and below, it's a stark distinction." River Design Group, based in Corvallis, was hired by WaterWatch to oversee the permitting process. The company was also involved in removal of Gold Ray Dam and Gold Hill's diversion dam on the Rogue River prior to 2010. Scott Wright, a Grants Pass High School and Oregon State University graduate, is the lead engineer for the company on the local projects, as he was with the Gold Hill dams. "Having grown up on the Rogue River, it's really an honor to be back … and working on these two significant fish passage barriers," Wright said.

The dam removal hasn't come without some opposition. The owners of the property where the dam is located, Steve and Sharon Keeton, filed an appeal in Jackson County to stop the work, but the appeal was overruled by a Jackson County hearings officer. WaterWatch filed suit against the Keetons and a family trust in 2013 because the dam was in violation of the federal Endangered Species Act. The outcome of that was access to the property to get the dam out in exchange for $5,000 to the property owners, according to Hunter. "We entered into a landowner agreement with the Keetons to remove the dam. They granted access," Hunter said. "The dam was a liability, with no storage or water rights attached." Sharon Keeton, when contacted Wednesday, declined to comment. Last week, her brother Rodney Crume sat on the access road, delaying heavy equipment for three hours. The project leaders called in Jackson County sheriff's deputies and Oregon State Police to gain access. On Tuesday, the Oath Keepers of Josephine County arrived on the scene, with former state Rep. Gordon Anderson of Grants Pass, questioning the permits and asking for sediment sampling, Wright said. One argument against removal, by local resident Alan Ehr, was that potentially harmful sediments could be unleashed downstream, including heavy metals such as arsenic. Wright said because the sediment was mostly coarse sand, the U.S. Army Corps of Engineers didn't require arsenic levels to be tested.
"We're doing everything according to regulatory requirements," Wright said.

(That's all folks – The End!)

Officials expect new dam to finish this fall

By BEN JACOBSON, 8/16/15, wcfcourier.com

DELHI, Iowa (AP) — Todd Gifford didn't have long to enjoy the perks of being a lakeside property owner. Shortly after he purchased a home near Lake Delhi, it began to rain. Though the inclement weather passed relatively quickly, roiling, raging stormwaters punched through an earthen dam wall. On July 24, 2010, the man-made lake emptied into the North Fork Maquoketa River watershed. "We did (enjoy the lake) for six months," Gifford said. He paused. "Maybe actually more like four months." Five years later, Gifford is still there. A new dam — part of a $16 million lake restoration effort — is nearing completion and various public access improvements and upgrades are almost finished, the Telegraph Herald (http://bit.ly/1Ki94Eq) reported. Though his time near the lake was brief, it was impactful, Gifford said. "We got to feel and understand why it's an important destination for Iowa," Gifford said. "It's a beautiful spot." It's an "exciting" time for eastern Iowa, according to Steve Leonard, president of the lake district's board of trustees. Lake Delhi still is on track to be refilled this year — likely in late fall — in the same footprint and at the

same level as it was prior to the 2010 storms. "Our whole community is extremely excited," Leonard said. "We're all in the last stages of getting preparations made for the lake being filled up." Since the lake drained, oversight has been passed to the Lake Delhi Combined Water Quality and Recreational Facility District. The district has the authority to tax property owners to raise funds for the lake's restoration. District trustees secured $5 million from the state to help build a new dam and spillway, plus $300,000 for pre-construction studies. Delaware County officials will chip in up to $3 million for construction of the spillway.

Though the lake itself will be nearly identical to what existed before, public access opportunities will be greatly improved, Leonard said. The district gifted the Turtle Creek recreation area to the county, and the two entities are splitting most of the costs to make it more hospitable to visitors. Turtle Creek now has two boat ramps, a parking area, new restrooms and county conservation officials are exploring the possibility of installing a new beach. It's a far cry from what was there before, according to Garlyn Glanz, the county's conservation director. "No boat ramp, very little parking, hard to have access to the water and a very old restroom facility," he said. About $100,000 for public access upgrades will come from the state. The remainder of the project's $700,000 to $800,000 price tag will be split between the district and the county. The public access improvements were required to receive public funding. More than 200 homes near the lake were damaged by flooding, Leonard said. Most of those properties are being restored, he said. On Aug. 1, more than 100 area residents and volunteers spread out across the lakebed, uprooting hundreds of trees. Gifford — who is a district trustee — and a smaller crew of workers recently went out again to take down some of the larger trees that could not be reached by heavy machinery. "(The) focus was on hand-cutting down trees that are in areas of the lake that would be a recreational hazard, safety-wise," Gifford said. The project suffered a setback June 23 when a temporary cofferdam gave way after a series of rains. Fixing and sealing the breach took about a month. "Since then, our contractors have been trying to make up for time lost," Leonard said. "We're optimistic and our expectation is that we'll have a dam completed this fall." That optimism is shared by the surrounding community, according to Leonard. "I know a lot of people have already started getting their boats ready to be used or (are) buying new boats," he said. "They're preparing for a big year next year."

(Looks like a pile of broken concrete!)

Musselshell River dam would be removed under FWP proposal

BRETT FRENCH/Gazette Staff, billingsgazette.com, 8/16/15

A concrete diversion dam in the Musselshell River, MT about five miles east of Lavina would be removed and the banks restored under a proposal by Montana Fish, Wildlife and Parks.
A draft environmental assessment examining the removal of the Egge Diversion Dam has been released for public comment. The proposed alternative in the EA would demolish the structure by using explosives or hammering and cutting. The dam was flanked on the right abutment in the river's massive May 2011 flood, which saw the flow rise to around 9,000 cubic feet per second upstream, compared to the normal rate of about 200 cfs. When the river washed around the old dam it created a new 120-foot-wide channel.

Mike Ruggles, FWP fisheries biologist, said removing the dam would open up 24 miles of the river to fish passage and reconnect two sub-basins: Painted Robe and Big Coulee creeks. The Musselshell River is riddled with 28 diversion dams that feed irrigation ditches or pumps. Some are built to provide fish passage while others are not. Ruggles' goal is to create as much fish

passage along the river as possible. Taking out the dam would also open up the river between Lavina's Highway 3 bridge 16 miles downstream to the Dean Creek Road for boaters and anglers. According to the draft EA, "The diversion is believed to have been built over a beaver dam with concrete placed directly over the willows in the 1930s to 1940s with the original dam having additional concrete formed and placed over it in the 1980s." Although the 112-foot-long, 15-foot-wide dam no longer blocks fish, the new channel is steadily eroding into a farmer's field. The dam also backed up ice in 2014 that, when released, caused damage downstream.
Bank stabilization using a willow soil lift design — essentially burying dormant willows along the bank so they sprout and secure the soil — would act as a demonstration project to learn if a similar approach could work at other sites along the river. Work could start as early as this fall. The project carries an estimated price tag of more than $354,000, which will be funded by a variety of grants from state and federal agencies.

(An Opinion on an academic exercise.)

The future of dams: A study will be good to watch

EDITORIAL, unionleader.com, 8/17/15

A Sunday News story on dams intrigues, not just because of how many active dams we have (more than 2,600) but for the thought that public officials are giving them. Dams, to paraphrase Vice President Joe Biden, are a big deal. Many are owned by towns and cities. What to do when they need replacement or repair is largely a local question, but local officials need to, and often do, consider their neighbors. UNH is involved with a taxpayer-funded project to study dams and their ramifications over the next four years. UNH researcher Kevin Gardner doesn't think the study is "going to change local control, but what we can do is help put that local decision into a greater context." Revising, rebuilding, or removing a dam can affect a wide area. One example in our story was the Mendums Pond Dam in Nottingham. A failure of that 19th-century dam could flood houses in Nottingham and Lee and spill into roadways below, including U.S. Route 4. The state owns that dam and will be fixing it. In Exeter's downtown, the "Great Dam" will be removed entirely next year. Selectmen, our story said, couldn't reach consensus on whether to fix, replace, or partially replace the dam. Citizens instead decided the matter at town meeting, voting to remove it. That is a decision that may have unintended consequences for something that, in one version or another, has been in that spot since 1640.It will be in all Granite Staters' interest to see what the UNH-involved study comes up with regarding the fate of dams and how those decisions are made. Many are all but forgotten by most of us, until a snowy winter creates a spring flood.

(Sometimes modelling is the only way to get the answer!)

Utah's Miniature Dams Model the World's Water Future

By JENNIFER PEMBERTON • 8/18/15, upr.org

Blake Tullis stands in the model spillway he designed for the Isabella Dam in California at the Utah Water Research Lab in Logan. Credit Donna Barry, Utah State University

The United States had its heyday building dams in the 1930s and 40s, but there are still engineers designing dams right here in Utah. Jennifer Pemberton visited the Utah Water Research Lab in Logan to see models of cutting-edge dams designed to be built all over the world. I'm watching videos of dam tests with Blake Tullis, an engineering professor and researcher at the Utah Water Research Lab in Logan. He recently returned from France, where he saw what happens when a dam opens its floodgates all the way, creating essentially a catastrophic flood. This flood was intentional, part of a two-day long test that cost

55,000 euro in lost electricity production revenue. Tullis is stoked about big dam releases because he's used to working with tiny scale models of dams. The hydraulics modeling lab looks like a cross between a skate park and a water park with lots of shaped concrete and tubes and pipes. The Logan River actually runs through the building and the lab can divert the water into its models where it can be a stand-in for the Kern River in California or the Susu River in Malaysia.
We easily walk to the top of the model of the Isabella Dam near Bakersfield, California. It's like a really lumpy empty swimming pool. The reservoir is essentially the deep end of the pool and we're standing at the top of the water slide that will be a new spillway for the dam. "This spillway was designed to carry 50,000 cubic feet per second at maximum flood design," Blake tells me. "Even though there's no water in California now, the problem maximum flood is now half a million cubic feet per second, so an order of magnitude higher, or ten times higher. They came to us for help." This spillway is a new design from Tullis and his students, and once it's built Isabella Dam will be able to hold and spill more water, giving the dam managers more control over increasingly unpredictable water levels.

We take a golf cart to another building with one of the international dam models. This one is like a crystal pyramid. It has a clear plexiglass stair case coming out of some wooden scaffolding. It's a design for a spillway for a hydropower dam in Malaysia. When there are flood flows, there's too much water to make electricity with. The water comes out with so much force that it can destroy anything below. "These steps break up some of the kinetic energy so it's not so problematic down here," says Tullis. There aren't many dams being built in the U.S. these days. Tullis says engineers have shifted their design work away from huge new dam construction to making dams more efficient and rehabilitating old dams with improvements like these new spillways and adding in tubes for fish passage. But in other countries, dam building is big right now. Big like the 1930s and 40s in this country. "In Switzerland, for example, 40 - 45% of their energy comes from nuclear power," says Tullis. "After the Fukushima disaster in Japan, they're planning on mothballing all of of their nuclear and compensating with hydropower." There are dozens of examples of models and projects at the Utah Water Research Lab that are intended for other places. And not just for hydropower, but also for irrigation solutions and flood control in developing countries that don't have sophisticated water delivery systems and still have serious water quality problems. Blake Tullis has project money set aside to go visit the dam in Malaysia after it's completed. It's pretty fun to open the valve and watch the Logan River flow through a 1:35 scale model of a dam, but based on the photos and videos he keeps on his computer, it's clear that he enjoys seeing the real thing about 35 times more. I tease him about the dam selfies I see as he scrolls through his photos. "It's pretty rewarding to do applied research that ends up helping people all over the world solving common problems," he says. "It's a good feeling to be producing something not just journal worthy but useful as well." WATCH: The Army Corp of Engineers testing Blake Tullis' design model for the Isabella Dam in California. http://upr.org/post/utahs-miniature-dams-model-worlds-water-future

---

(Expennnnnsive with lonnnnng schedule, but necessary!)

Seepage barrier proposed for Boone Dam, US

19 August 2015, waterpowermagazine.com

A composite seepage barrier may be built to correct water seepage and erosion at Boone Dam near Gray, Tennessee, US, Tennessee Valley Authority (TVA) has announced. The repair - which is pending a formal environmental review - was recommended by TVA engineers and other dam safety experts for the earthen embankment portion of the dam. Involving a multi-stage combination of grout injections and concrete, the project could take five to seven years to complete and is expected to cost between $200 and $300 million. After seepage under the embankment was discovered in October 2014, a thorough investigation discovered a complex series of underground geological pathways allowing water from both upstream and downstream sources to cause internal erosion. If left uncorrected, the erosion could eventually lead to the failure of the dam. "The proposed composite seepage barrier should prevent further erosion and we are confident will provide the most robust, long-lasting repair at Boone Dam," said John McCormick, TVA vice president of Safety, River Management and Environment.

Preliminary testing and site preparation work is already underway.

(Not useful, get rid of it!)

Death to a deadbeat dam on the Eklutna River

Rick Sinnott, August 2, 2015, adn.com

EKLUTNA, Alaska -- In 1929, the Eklutna River was dammed, forever it seemed. A 61-foot-high dam impounded the river about 1 1/2 miles upstream of the old Anchorage-Palmer highway. And few man-made things appear to be as immutable as a concrete dam. On a recent hike through the Eklutna River canyon, slipping on boulders coated with brown algae, wading back and forth between the banks to avoid sheer cliffs or deep pools, I considered what it would be like to be a salmon growing up in such a river. Fishing for evidence of prehistoric earthquakes and sockeye salmon in Eklutna Lake

Imagine overwintering as one of thousands of translucent, orange eggs buried in the gravels of riffles or deep pools. Maybe I'd hatch into an alevin, become a fingerling and survive another year or two in the frigid water, constantly alert to predators like rainbow trout and American dippers. One day, with a little luck, I'd become a silvery smolt and swim downstream to Cook Inlet.

Only there are no salmon in Eklutna River above the old hydroelectric diversion dam. The dam decimated the river's salmon runs.

If you're a salmon, however, help is on the way. The Conservation Fund -- in partnership with the Native Village of Eklutna and Eklutna Inc. -- has formally announced its intent to remove the dam now owned by Eklutna Inc. Brad Meiklejohn, Alaska director of The Conservation Fund, has notified affected parties and agencies, including the U.S. Corps of Engineers, U.S. Fish and Wildlife Service, National Marine Fisheries Service, Alaska Department of Fish and Game, Alaska Department of Environmental Conservation and the Alaska Dam Safety Program in the Department of Natural Resources. He is working with HDR Inc. on a preliminary dam removal strategy, which will include how to safely disperse the tons of sediment accumulated above the dam.

Walking the river

Even though it's dammed, Eklutna River remains one of the wildest streams in Anchorage. The river is seldom visited because access is difficult. There is no trail, and the precipitous, crumbling canyon walls and slippery in-stream boulders make footing hazardous. Consequently, fish and wildlife are unaccustomed to encountering human visitors. Although the salmon are long gone, rainbow trout in shallow water darted for cover at my approach. The biggest rainbows -- the top dogs of the river's aquatic food chain -- all seemed to be about 6 inches long. Walking downstream, I found moose hoof prints on the occasional muddy spots and sand bars. A single wolverine track was a rare find in summer. A black bear had scrambled across a sand bar. Just before reaching the dam I noticed a few brown bear prints, the freshest tracks of the day. Approaching the dam across the impounded sediment basin, in the last hundred yards before the river poured over its concrete lip, the water level had risen unexpectedly into the surrounding brush. A freshly gnawed stick signaled the presence of a beaver. I soon stumbled upon the beaver's mud-and-branch dam, which, by impounding water several feet higher than the concrete dam, was one instance where a furry, brown engineer surpassed the efforts of his college-trained and licensed peers.

A 24-year-old agreement

Before the hydroelectric diversion dam was built, Eklutna River was inhabited by chinook, coho, sockeye, chum and pink salmon. Almost certainly some of these species spawned and spent their early years in Eklutna Lake. All five species are still found in the river below the dam, though in greatly reduced numbers. Like most dams, the lower Eklutna dam had a limited life expectancy. The construction of a tunnel from Eklutna Lake to a new hydroelectric plant on the Knik River in 1955 sealed its fate. After routine maintenance ceased, the dam quickly filled to the brim with rocks and sand carried downstream by the current. The dam has served no purpose for half a century. Like thousands of others across the United States, it has become a "deadbeat" dam -- outdated and ecologically destructive. When the dam was built in 1929, there were no laws requiring environmental protection or mitigating the adverse effects of development. However, when the newer hydroelectric facility was transferred to a consortium of electric utilities in 1997, it triggered a 1991 agreement between the state of Alaska, municipal and private electric utilities, and federal and state resource agencies. The 1991 agreement required the new owners to mitigate damage to fish and wildlife caused by the dams. The owners had 30 years from the transfer to do so, which means that rehabilitation must be initiated by 2027. The relatively straightforward agreement has been complicated by subsequent events. The biggest complication is conjuring up enough water to facilitate salmon migration and survival. According to the utilities' water rights certificate, "any and all" of the water flowing into Eklutna Lake is legally reserved for hydropower. However, in the mid-1980s Anchorage tapped the lake for its water supply. Essentially all of the annual discharge from the lake is used to generate electricity and supply about half of Anchorage public water supply. With essentially all of the water flowing into Eklutna Lake employed in supplying electricity and municipal water, there is no economic incentive for the utilities to allow any water to drain from the lake into the river. Owners may be reluctant to do anything to rectify dam-related environmental impacts, such as the loss of salmon in the river and lake, before 2027, if then. Affected groups, such as the Native Village of Eklutna, and state agencies are beginning to ask why not. Although the U.S. Army Corps of Engineers, in cooperation with other agencies, has conducted research and proposed several solutions, no one agency or organization seems to have been able to muster the commitment necessary to remove the lower dam. Until now.

Removing the dam

According to the conservation organization American Rivers, during the past century the United States led the world in dam building. Over 80,000 dams greater than 6 feet tall have been built. Many thousands of smaller dams also exist. Former U.S. Interior Secretary Bruce Babbitt once observed that "on average, we have constructed one dam every day since the signing of the Declaration of Independence." During the past century an effort has also been made to disassemble dangerous and superfluous dams, especially those blocking the passage of salmon or other anadromous fish. An estimated 1,150 dams have been removed, mostly in New England in states bordering the Great Lakes and on the West Coast. The Native Village of Eklutna has been trying for years to increase salmon numbers in Eklutna River. In 2002 it orchestrated a planning effort to remove the dam. After a few meetings, the planning team's momentum ground to a halt. Meiklejohn describes the dam's present owner, Eklutna Inc., as a "huge booster" of the project. Removing the lower dam will eliminate the largest hurdle, but a second step will be needed to restore salmon spawning and rearing habitat in the river. The upper dam, at the lake outlet, is designed to impound water until the late-summer lake level overtops the spillway. Some water will need to be released from the dam on a regular basis. Finally, even with the lower dam removed and additional water flowing downriver, full restoration would require a fish ladder or another way around the upper dam.

One step at a time

Meiklejohn is taking it one step at a time. He met with representatives from the agencies involved in the previous planning effort on July 17. Before beginning, The Conservation Fund and Eklutna Inc. will need the appropriate permits and other authorizations from agencies. According to Meiklejohn, "the inertia associated with this project is enormous." But getting from here to there doesn't faze him. "We wanted to take the position that the dam removal is happening, we are starting it, and we will deal with the issues in sequence."

The next stage will be engaging the owners of the hydroelectric facility. At this point, all The Conservation Fund will ask from the owners is, once the lower dam is torn down, for them to spill enough water into the river to allow salmon spawning and rearing. Some salmon would move into the river above the dam site as soon as an adequate channel was available through the sediment. Although some sockeye are found in the river below the existing dam, Fish and Game might also decide to stock the lake with fry, which would out-migrate and return several years later as spawning adults. But at this stage, there are still many unknowns. Once the lower dam is gone, when the sediment behind the dam is flushed away, the beaver's dam will wash away too. The beaver will adjust as beavers, always hard working, always do. And salmon will begin to repopulate the Eklutna River for the first time in nearly a century. *Rick Sinnott is a former Alaska Department of Fish and Game wildlife biologist. The views expressed here are the writer's own and are not necessarily endorsed by Alaska Dispatch News. Contact him at rickjsinnott@gmail.com.*

Hydro:

(Hi Ho Hydro to the rescue.)

Hydro increases flow on Ash River to help trout

Eric Plummer / Alberni Valley Times, August 14, 2015, avtimes.net

Although dry conditions are expected to persist, a river that has been reduced to a trickle northwest of Port Alberni is set to surge next week.
BC Hydro plans to dramatically increase flows in the Ash River from Monday to Wednesday to help the migration and spawning of steelhead trout by opening up a valve at its hydroelectric dam in the area. Since May the province's utility provider has seen the lowest levels in the river since it began running a hydroelectric system near Great Central Lake 52 years ago. A streamflow of 12 cubic metres a second in April fell to six cubic metres in May, followed by volumes of 2.5 and 1.5 per second in June and July. The averages for those respective months are 24, 28, 22 and 13 cubic metres a second. "The extent of these current drought conditions is remarkable and unprecedented," said BC Hydro spokesperson Stephen Watson. "The previous record-low water inflow rate for this time of year was two cubic metres a second." Anything under 3.5 cubic metres is not enough for steelhead trout migration in the summer, according to a provincially regulated water licence BC Hydro entered over a decade ago. To accommodate the shallow streams the utility providers plan to mimic a rainstorm by increasing flows to nine cubic metres on Monday, then the valve will be closed down to a 3.5 cubic metre per second volume.

"It's designed for steelhead to get past natural obstacles along the upper Ash River system - that's Lanterman Falls, Dickson Falls - so they can access Dickson Lake and areas like that for migration and spawning," Watson said. "That's something we do every year to assist steelhead moving through the system for spawning and overall fish production." The low volumes are not unique to the Ash River. For most of the summer Vancouver Island has been under a low streamflow advisory from the province's River Forecast Centre, and dry conditions are anticipated to stay until the autumn rains. The Ash River system's Elsie Lake reservoir is holding at a depth of 326 metres - just one metre below the historical average for this time of year. But this has been maintained by running the hydroelectric system sporadically, forcing the region to rely on power generated from the Peace and Columbia rivers on B.C.'s mainland. "By not running the generating station much at all, it conserves water so we can manage through this extreme drought into October," said Watson. "As we know on the Island, sometimes the rains don't arrive until early October or into November, should that happen we won't to be prepared." Next week people in the Ash River watershed are advised to be mindful of the increased flows. BC Hydro

plans to open up the Elsie Lake valve again from Aug. 24-26 and Aug. 31-Sept. 2. "For public safety, BC Hydro advises the public to be cautious around the Ash River when flows are increased on August 17, 24, and 31," stated the utility provider.

(Turbines doing their thing - going around.)

2. Where the Turbines Roar

STEPHEN REISS, magicvalley.com, 8/15/15

Shoshone Falls Power Plant

The first thing you notice at the Shoshone Falls power plant is the noise. What begins as a subtle buzz outside the doors rises to a raucous hum inside the generator room. Inside the main generator, the turbine's roar is so loud I can barely hear hydropower specialist Dennis Bramon as he describes the process of generating electricity with water. It is that process, and its connection to the Twin Falls region's history, that makes the Shoshone Falls power plant significant. The plant was the first in the Magic Valley, built in 1907. It was acquired by Idaho Power in 1916, rebuilt in 1921 and now includes a diversion dam and a powerhouse with three generators. Their capacity totals 12.5 megawatts. I.B. Perrine persuaded Harry Hollister, from Chicago, to invest in the hydroelectric project in 1900, filing a claim for 3,000 cubic feet per second of water from each side of the Snake River.

As we walk through the plant's echoing metal walls, past electrical panels with the original meters, Idaho Power spokesman Brad Bowlin imagines the generator lighting homes in the city's early days. "Twin Falls probably would not have developed like it did without the Shoshone Falls plant," Bowlin says. At a time when the utility is discussing options to upgrade the facility, its significance comes into sharper relief. "You take it for granted, myself included, every time you turn on that switch that the light bulb is going to go on," says Randy W. Hill, Idaho Power's regional manager for hydro production. "You never really think about the guy getting to the plant because it tripped off through a storm." Walking out the plant's doors, I pass a stencil on the wall of "Reddy Kilowatt," an anthropomorphized jolt of electricity that was a corporate spokesman for U.S. electricity generation for seven decades — and a reminder of how the unseen inner workings of this power plant played a role in Twin Falls history.

(Brings back memories of the Ossberger turbine! What about that head cover?)

Backtracking: In Our Times: Goodyear Lake dam powered up again in 1980

thedailystar.com, Mon Aug 17, 2015, by Mark Simonson

You could almost hear the collective sigh of relief by Goodyear Lake residents and campers on Monday, Aug. 11, 1980. What could have become a nightmare — the removal of the dam and draining of the lake — finally ended with a flip of a switch at 3:40 p.m. that day, putting the old hydroelectric dam back in operation. A previous column chronicled the days after 1967 when New York State Electric and Gas announced plans to abandon electrical activities at the dam. The dam was falling into a state of disrepair and there were concerns of its eventual removal. The Goodyear Lake Association worked to create a deal with NYSEG and a Canadian firm, F.W.E. Stapenhorst, to restore and reactivate the hydroelectric plant and dam. The deal was confirmed in October 1978. Stapenhorst began renovations and by August 1980 it became time for a dedication ceremony. "State Supreme Court Justice Robert Harlem, himself a Goodyear Lake resident, was master of ceremonies," The Daily Star reported on Aug. 12. "He said it was 'an unusual moment … one in which adversity was turned into advantage … through the enterprise of an entrepreneur (Stapenhorst).'" Harlem also praised Fred Knott, another lake resident and businessman, for his efforts to save the lake and plant. "No one was more tenacious (than Knott) in meeting the challenge," Harlem said. "He saved Goodyear Lake for us. He ought to be remembered in a real way for what he did." Robert L. Moon, a NYSEG manager for the region, said that in abandoning the plant, his company first asked itself whether its customers should be asked — through the rates they pay for electricity — to subsidize an unprofitable operation. "I commend Mr. Stapenhorst, who had the guts to tackle and solve the problem," Moon said. "He brought down to roughly one-half the cost that would have faced NYSEG rate payers." Frederick Stapenhorst, president of the company, said that the power plant would generate 7.5 million kilowatt-hours of electricity annually, using turbines that were ideally suited for small hydro projects like Goodyear Lake.

Rehabilitation of the plant cost $1.75 million. Included in that amount was a $245,000 grant from the U.S. Department of Energy, a $10,000 interest-free loan from the New York State Energy Research and Development Authority, a $25,000 contribution from the Goodyear Lake Association and a $1 million bond issue at 7½ percent approved by the Otsego County Industrial Development Agency, as well as funds provided by Stapenhorst. The privately owned plant was the first of 22 hydroelectric demonstration projects in the nation supported by the U.S. Department of Energy. Federal and state authorities said they'd be keeping a close eye on the Goodyear Lake operations, designed to operate unattended, automatically, 24 hours a day.

During the process of obtaining the license to operate the plant, Stapenhorst spoke of the realities of working with the government agencies in the United States, himself being a Canadian resident. "We ended up with 265 pounds of paper in our license application," he said. "Our eight-page report on environmental requirements was turned down. So was our 24-page report. Our 100-page report was accepted. "We now know all species of reptiles in this area. We know every type of salamander in every shade and the number of toes they have — but I have never seen a single one." A ribbon-cutting event allowed a bottle of champagne to swing down against a concrete door jamb, but the bottle didn't break. A Stapenhorst aide had to rap the bottle against the jamb a couple of times and succeeded. This weekend: The immediate impacts of time following the arrival of the Albany & Susquehanna Railroad in Oneonta in 1865. Oneonta City Historian Mark Simonson's column appears twice weekly. *On Saturdays, his column focuses on the area during the Depression*

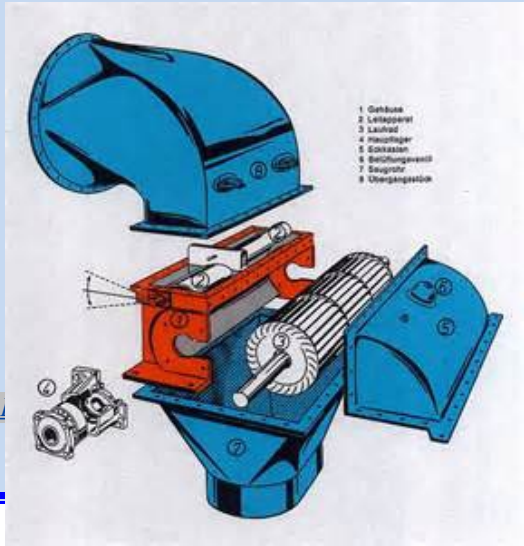

and before. His Monday columns address local history after the Depression. If you have feedback or ideas about the column, write to him at The Daily Star, or email him at simmark@stny.rr.com. His website is www.oneontahistorian.com. His columns can be found at www.thedailystar.com/opinion/columns/.

(Not good for anyone or anything, especially hydro!)

Central Asian glaciers thaw fast in threat to hydro power, farms

OSLO | BY ALISTER DOYLE, 8/17/15, reuters.com

Mountain glaciers in Central Asia have shrunk four times faster than the world average, threatening river flows vital for agriculture and hydro power from Uzbekistan to western China, scientists said on Monday.

Global warming is likely to quicken the thaw in the vast Tien Shan range in coming years, melting half the remaining ice by the 2050s, according to the study led by the GFZ German Research Centre for Geosciences. A local rise in temperatures, perhaps linked to climate change in the north Pacific and north Atlantic oceans, means ever more precipitation is falling as rain in summertime on the Tien Shan, eroding glacier ice, the study found. The melt is of "particular concern", the scientists wrote in the journal Nature Geoscience, because of rapid local population growth in a region that already suffers disputes over sharing water. The Tien Shan range, whose glaciers contain about seven times the amount of ice as the Alps or a third of the Himalayas, stretches 2,500 km (1,500 miles) through Central Asia. Tien Shan glaciers lost 27 percent of their total mass from 1961-2012, a rate of 5.4 billion tonnes of ice a year and about four times the global average glacier loss of 6.5 percent, the study said of data from satellites and monitoring on the ground.

The Manshuk Mametova glacier melts into a lake some 3,550 metres (11,647 ft) above sea level, in the mountains of Tien Shan outside Almaty August 31, 2013. Reuters/Shamil Zhumatov/Files

That meant river flows were now high, but would dwindle as the ice vanishes. "Currently we are in the golden phase, with relatively much water," Daniel Farinotti, lead author of the study at GFZ and the Swiss Federal Institute for Forest, Snow and Landscape Research, told Reuters. "But what could happen is quite worrisome." Water from the mountains helps grow crops in lowland areas of Kazakhstan, Kyrgyzstan and Uzbekistan, one of the world's biggest irrigated areas, and China's north-western Xinjiang region, the experts wrote. In 2012, Uzbek President Islam Karimov said that disputes over Central Asian water resources risked provoking military conflict, kept in check under the former Soviet Union by Moscow's centralised management. Kyrgyzstan, for instance, needs to use water for hydro power production in winter while Uzbekistan, downstream, wants water to stay in reservoirs and be released in summer for farmers including cotton growers. *(Editing by Robin Pomeroy)*

(Does this contraption really work? Looks you could cut hay with it!)

Small-scale hydro project comes online in Iguigig

By Tim Bodony, KIYU - Galena | August 19, 2015, alaskapublic.org

A prototype in-river hydropower system is currently in operation at Igiugig in southwest Alaska. It's part of a recent surge of research that has pushed in-river hydro power closer to becoming a reality for rural communities seeking an alternative to diesel-based electricity. Given that most rural communities in western and interior Alaska are situated on rivers, hydropower seems like an obvious renewable energy source. Putting up dams on big rivers like the Yukon is unlikely to happen for environmental and economic reasons, but in-river hydropower is a possibility. An in-river power system is like a wind mill, but in the water, using the kinetic energy of flowing waters to move blades, which spin a turbine and create electricity.

Alaska Village Electric Cooperative President and CEO Meera Kohler is keeping an eye on developments with in-river hydro technology, and says it has some promise for her member communities scattered across rural Alaska. But there's a catch: "Obviously, moving water has a lot of energy associated with it, and trying to harness that is the goal. But being able to harness it with destroying the machine that is harnessing it every couple of weeks – that's the challenge." The destruction that Kohler is referring to would come from one of in-river hydro's biggest challenges to date: driftwood and debris. Tests of small in-river turbines at Ruby on the middle Yukon River and Eagle on the upper Yukon were constantly plagued by driftwood. Unlike the design tested at Ruby and Eagle, which was suspended just under the surface of the water by a small pontoon platform, the prototype in use at Iguigig right now sits on the river bottom. It's much wider than it is tall and looks like an old fashioned push lawn mower rather than a typical wind mill or table fan shape. The prototype is called the RivGen, and it was designed by Ocean Renewable Power Company, which is based in Maine but has an office and several projects underway in Alaska. Monty Worthington is ORPC's Director of Project Development. Having a hydropower system sitting on the bottom of a river, Worthington says, has several advantages. It works quietly and out of sight, but…. "More importantly it gets us down below the floating debris in a river. That can be wood, that can be ice in some cases. Anything that is floating on the surface of the river we are no longer in the way of, and it also includes impeding navigation in certain areas, so we can be down a depth where boats are able to pass freely over the device."
If placed in a river like the Yukon, the RivGen or any in-river hydropower system would still have to contend with heavy amounts of silt, grinding into and ruining moving parts. Worthington says that ORPC has been testing various styles of bearings and seals for 6 years through a partnership with UAA, and have found some promising solutions. But even materials containing diamonds are proving to be susceptible to silt damage over time, so bearings will need to be replaced as part of routine maintenance.

The RivGen test site on the Kvichak River at Igiugig is clear and mostly free of debris – not an ideal place to test the turbine's ability to deal with driftwood and silt. But the clear water does give researchers a better chance to watch how the blades impact fish, another important environmental consideration that hydropower designers must deal with. At a test site on the Tanana River at Nenana, researchers from the University of Alaska Fairbanks' Alaska Center for Energy and Power are putting some different in-river hydro designs through their paces in more challenging environment, including lots of driftwood and silt. The most recent design to be tested comes from Oceana Energy Company. It's suspended just under the surface from a barge, and looks like a ring with shark fins embedded around it. According to Alaska Hydrokinetic Research Center Program Director Jeremy Kaspar, the Oceana system worked without a problem for a

month last fall and a month earlier this summer. The Oceana unit was protected by a UAF-designed debris diverter placed just upstream, which Kaspar says was highly effective. "The debris diverter is kind of a V, and we can adjust the angle. At the tip of the V, there is a cylinder that rotates, and when the debris hits that cylinder the debris starts to rotate it and the debris slides off the sides."

The UAF team also changed the anchoring system to rely on a single line instead of many, reducing the amount of driftwood getting caught by the lines. Future research is going to look at the potential problems caused by subsurface debris, like water-logged trees and root balls that bounce along the bottom of a river. When silty water does not allow for video cameras to get a look at what's going on, Kaspar says the researchers will use sonar. "The other thing that we are going to be doing in conjunction with the sonar is having a mechanical means of detecting debris – basically we're gonna put down a grate near the bottom and see if we can get some simultaneous impact measurements along with the sonar. So then we will know what the sonar is seeing and what the impact forces are." As more of the engineering hurdles are crossed, Kaspar predicts that in another five years in-river hydropower systems will be ready for widespread use across Alaska. "I am hoping that we start convincing the Department of Energy that they really need to fund these pilot projects in places like Alaska. I think what we will probably see in the next few years is a few communities – Igiugig is almost there – adapting these technologies, with partnerships between the developer and the community." Regardless of the technical advances with in-river hydropower systems, no one thinks they can survive spring breakup, so they are all being designed to be removed from the water in the fall or winter before the ice goes out.

Water:

(Godzilla lives!)

With 'Godzilla El Niño' expected, focus shifts to Pasadena dam that could overflow

By RONG-GONG LIN II AND ABBY SEWELL contact the reporters, 8/14/15, latimes.com

With forecasters saying that this winter's El Niño could be among the most powerful on record, officials preparing for the expected downpours are focusing their attention on vulnerabilities in Southern California's flood-control system. The National Weather Service's Climate Prediction Center said Thursday that this El Niño is shaping up to be as strong as the El Niño that sent storms in 1997-98 that killed 17 people and caused more than $550 million in damage in California. "This definitely has the potential of being the Godzilla El Niño," said William Patzert, a climatologist with NASA's Jet Propulsion Laboratory in La Cañada Flintridge.

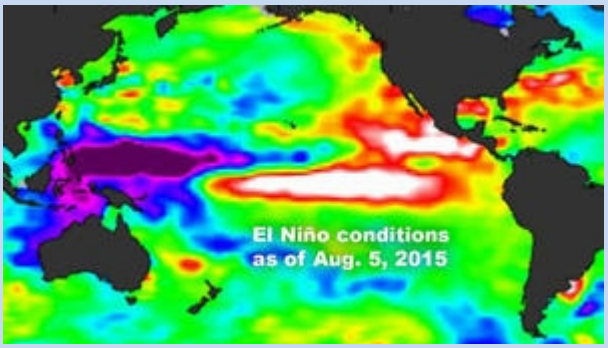

The strengthening El Niño in the Pacific Ocean has the potential to become one of the most powerful on record, as warming ocean waters surge toward the Americas, setting up a pattern that could bring once-in-a-generation storms this winter to drought-parched California. Los Angeles County Flood Control District officials said they have cleared debris basins and flood-control channels throughout the county — the first line of defense against mudslides — and made some improvements to dams and other infrastructure since the county's last major rainstorms in 2004-05. But they remain concerned about Devil's Gate Dam in Pasadena, where debris that accumulated as a result of the Station fire has put neighborhoods downstream along the Arroyo Seco in danger of flooding. Los Angeles County plans to remove 2.4 million cubic yards from the Hahamongna flood-control basin above Devil's Gate Dam over the next five years. Some neighbors, outdoor recreation enthusiasts and environmentalists who oppose the project are suing to stop it. But the sediment-removal project will not start until next year. The county has not yet awarded a contract for the work, said Keith Lilley, who oversees a group of county Department of Public Works staff who respond to storm events. There is risk of flooding south of the dam — affecting the 110 Freeway, Pasadena, South Pasadena and northeast Los Angeles — if the San Gabriel Mountains are soaked with a series of unrelenting storms and send large amounts of mud, rocks and burned trees into a full basin, officials said.

“If we had multiple major storms with sediment, the reservoirs would fill up and we would have very little capacity for flood control and water capture,” he said. A 2011 county report painted a grim picture of what would occur if huge rainstorms hit Devil's Gate. Under a worst-case scenario, torrential rains could send mud, rocks and water over the dam and flooding into the Rose Bowl,

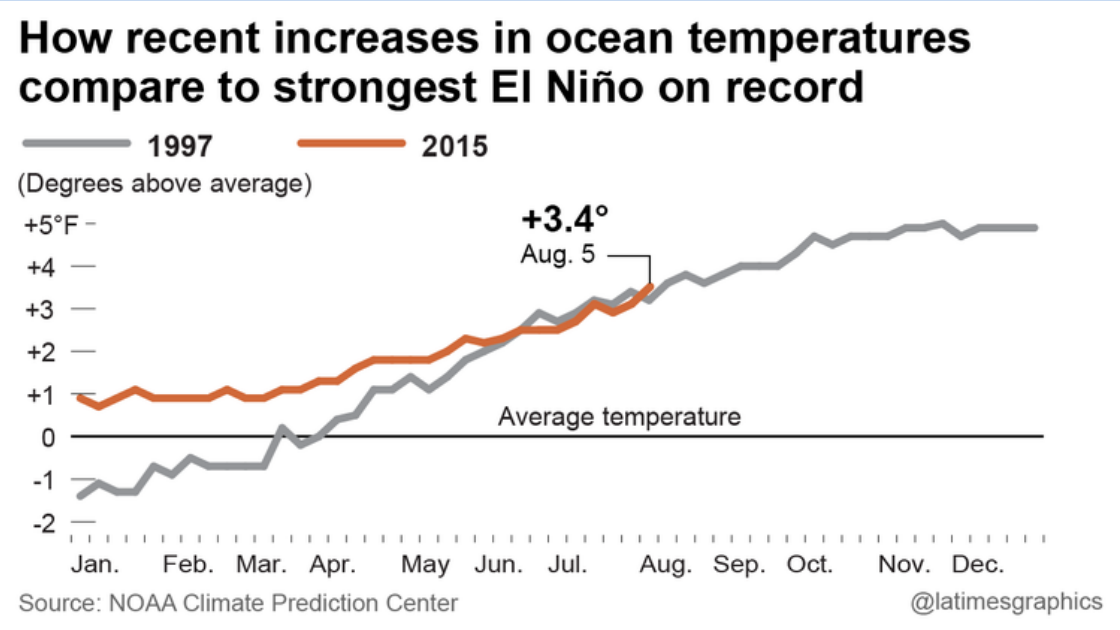

South Pasadena and northeast Los Angeles in less than 40 minutes.

El Niño 3.4Ocean temperatures have exceeded levels in the summer before the monster El Niño of 1997-98, which caused storms to pound California that winter. These temperatures are in a region of the Pacific Ocean along the equator known as "Niño 3.4."

A subsequent report said the Rose Bowl probably wouldn't be flooded in a single storm but could be at greater risk after a series of storms if sediment isn't quickly removed from areas downstream from the dam.

Major sediment-removal projects are planned for other dams in Pacoima, Tujunga and three up in the San Gabriel Mountains. Those other reservoirs also have sediment buildup, but not to the same extent as Devil's Gate.

The Devil's Gate work has been stalled by critics who say the operation will destroy wildlife habitat that has grown up in the basin, displace recreational activities and disrupt nearby residents with heavy truck traffic. The opponents lobbied for a smaller plan that would remove 1.4 million cubic yards of sediment.

The county has done smaller debris removal projects focused on the base of the dam to prevent the valves from being clogged.

The county is going through the design and permitting process and still has to award a contract for the larger project, Lilley said. In the meantime, he said flood-control staff will be monitoring the situation and continuing their normal maintenance of the system.

Supervisors Michael D. Antonovich and Hilda Solis will ask for a full investigation into the county's preparedness at all county flood-control facilities, including Devil's Gate.

Previous storms have shown vulnerability in the region's flood-control system.

Devil's Gate Dam was built in 1920 after devastating floods in the early 20th century, including the flood of 1914, which sent more than a dozen homes and a two-story grocery store down the arroyo.

In 2010, the year after the Station fire, an unexpectedly powerful rainstorm unleashed a torrent of mud that inundated more than 40 houses.

The power of the debris flowing off the mountain pushed a 10-ton boulder into a critical catch basin. The boulder clogged the drain like a giant stopper and the ashen muck went through the Paradise Valley neighborhood on Ocean View Boulevard. Mud flowed two miles to Foothill Boulevard.

There are several reasons scientists say El Niño is gaining strength.

First, ocean temperatures west of Peru are continuing to climb, reaching their highest level so far this year. The temperatures in a benchmark location in that area of the Pacific Ocean were 3.4 degrees above the average as of Aug. 5. That's slightly higher than on

Aug. 6, 1997, when the readings were 3.2 degrees above normal.

Second, the trade winds that normally keep the ocean waters west of Peru cool are weakening. For this year's El Niño to truly rival its 1997 counterpart, there still needs to be “a major collapse in trade winds from August to November as we saw in 1997,” Patzert said.

Despite the hopes for a wet winter, though, officials warned that even a monster El Niño year will almost certainly not mean an end to the drought.

In fact, it would take 2 1/2 to three times the average annual precipitation to make up for what was lost in the last four years of drought in the central Sierra, said Kevin Werner, the National Oceanic and Atmospheric Administration's expert on climate in the western United States. That far exceeds what occurred in 1983, the wettest year on record for that region, when the area received 1.9 times the average precipitation.

“A single El Niño year is very unlikely to erase four years of drought,” Werner said.

“The drought is not ending any time soon,” added Mike Halpert, deputy director of the National Weather Service's Climate Prediction Center.

Times Staff Writer Shelby Grad contributed to this report.

MORE ON EL NINO:

Another El Niño sign: Ocean temps hit highest level of the year

As El Nino grows, drought-stricken California braces for wild winter weather

It's critical El Niño hits Northern California. Why experts are growing optimistic.

Environment:

(Reservoirs are good for many things.)

Dam swim revived after 30-year hiatus

(Lee Zion/Capital Journal)
By Lee Zion Lee, capjournal.com, August 16, 2015

"It's the best dam swim in South Dakota," race organizer Jenny Hodges said. The event is the I Swam the Oahe Dam. People were invited to swim from the boat dock on the west side of the Missouri River to the east side — passing along the face of the dam. The distance was 2¼ miles, and 43 people took to the water Saturday morning to participate. This is the second annual event — depending on how your measure it. "We revived this. It was actually a race that was done back in the late '70s and '80s on a regular basis. And it's been not done now, until last year was our first year," Hodges said. Her motivation for bringing the race back was simple. When she was a youngster, she had always wanted to participate. By the time she got old enough to sign up, the races were no longer held.

"It's kind of been a lifelong dream to revive it so that I could do it. And I had pressure from other people, too," she said. Hodges noted that the distance of 2¼ miles is just about the right length for swimmers. It's comparable to an Ironman swim of 2.4 miles, or a 5K — which is a little more than 3 miles. Swimming along the Oahe Dam has a special attraction all its own, she added.
"We swim along the shoreline, and the waters of Lake Oahe are super clear. And so it's just gorgeous, because as you look down at the bottom, you can see little bass, little fish swimming underneath you. And it's really hard to find water this clear in most open-water swims," she said. People came from Aberdeen, Sioux Falls and several other locations in South Dakota. Ages were from the minimum 18 years old up to 86, and that gentleman was Frank Farrar — the 24th governor of South Dakota, Hodges said. Farrar, who has competed in Ironman challenges, remembered the original dam swims from the 1970s. The event hasn't changed much since then, he said as he prepared for the race.

Although the dam event was designed with swimmers' safety in mind — people unable to finish were pulled out of the water — Farrar had a rather morbid joke before the start of the race. "I'll probably be last. I just do it to stay alive. If I don't make it, I won't be alive," he said. The dam swim speaks well for South Dakota, he added. "We've got the greatest sports, the greatest everything — wildlife, hunting," he said. "So it's a wonderful state. He added that the event also helps showcase the dam itself — one of the largest earthen dams in the world. First-timers Amy Roux, Jo Sugrue and Dianne Timmer came from Sioux Falls to participate. These "three amigos," as they referred to themselves, heard about it from the Master Swimmers web site, and decided to sign up. "I feel it was a bucket list item," Timmer said. "To say I did it." "Yup, and finish it," Roux added. Adam Kastigar of Aberdeen, who also participated last year, was the first-place finisher this year. He had a time of 48:12 — and he even had time to relax and watch the fish along the way. "That was cool. I liked seeing the bottom and exploring. That's pretty cool," he said. "I just wanted to have fun this year and take it a little more relaxed and enjoy the view underwater." Megan Peterson of Sioux Falls was the first female finisher, with a time of 54:16. Because she's participated in Ironman competitions before, this was nothing new to her. Still, she had one challenge during the race. Buoys were placed to mark quarter-mile distances, and that last stretch was the hardest. "That last buoy seems a really long ways away," she said.

Other Stuff:

[i]This compilation of articles and other information is provided at no cost for those interested in hydropower, dams, and water resources issues and development, and should not be used for any commercial or other purpose. Any copyrighted material herein is distributed without profit or payment from those who have an interest in receiving this information for non-profit and educational purposes only.